cMT2108X2 series

Installation Instruction

1 Installation and Startup Guide

This document covers the installation of cMT2108X2 Series HMI, for the detailed specifications and operation, please refer to Datasheet, Brochure and EasyBuilder Pro User Manual. Please read all warnings, precautions, and instructions on the device carefully before use.

Install Environment:

NEMA Rating	The HMI product is NEMA 4 rated (indoor use only).
Electrical Environment	The HMI product has been tested to conform to European CE requirements. This means that the circuitry is designed to resist the effects of electrical noise. This does not guarantee noise immunity in severe cases. Proper wire routing and grounding will insure proper operation.
Environmental Considerations	(1) Make sure that the displays are installed correctly and that the operating limits are followed. Avoid installing units in environments where severe mechanical vibration or shocks are present. (2) Do not operate the unit in areas subject to explosion hazards due to flammable gases, vapors or dusts. (3) Do not install the unit where acid gas, such as SO_2 exists. (4) This device should be mounted in the vertical position and for use on the flat surface enclosure. (5) For use in Pollution Degree 2 Environment and dry location. (6) Relative Humidity: 10% ~ 90% (non-condensing)
Altitude	3,000 m
IP Rating	IP 66
Cleaning Considerations	Clean the device using dry cloths. Do not use liquid or spray detergents for cleaning.
⚠ Warning	Protection impairment if used in a manner not specified by the manufacturer. Déficit de protection si utilisé d'une manière non spécifiée par le fabricant.

2 Unpacking the Unit

Unpack and check the delivery. If damage is found, please contact the supplier.
NOTE: Place the operator panel on a stable surface during installation. Dropping it or letting it fall may cause damage.
The package includes:
(1) Installation Instruction, 2-sided A4 *1 (2) Human Machine Interface *1 (3) Power Connector *1
(4) Brackets & Screws *1 pack (5) USB Stick Clamp & Tying Strap *1

3 Installation Instructions

Use a control box that provides enough stiffness. Cutout Dimension: 260 mm x 202 mm. Secure the operator panel in position, using all the fastening holes and the provided brackets and screws. Screw Torque: 2.6 ~ 3.9 lbf.in. (For reaching waterproof effect and preventing the panel from being deformed.)
Plan for adequate space around the unit and inside the enclosure, for ventilation and cables. Consider the heat from other devices inside the enclosure.
The ambient temperature around the unit must be 0 ~ 50°C.
Minimum required clearances (along the overlay): Top 15 mm / Bottom 50 mm / Sides 80 mm
Maximum panel thickness: 4.5 mm

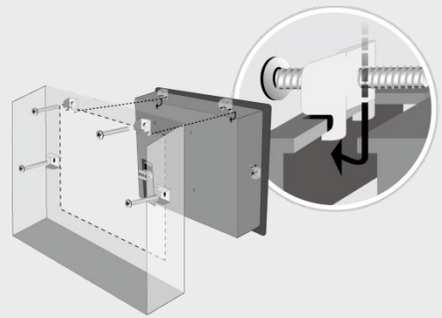

USB Stick Clamp Usage
Combining the USB Stick with the clamp and the tying strap can prevent USB stick from disconnecting with HMI when strong vibration is present.
1. Insert the USB connector to the clamp and tie them together with the tying strap.
2. Press the spring and insert the USB stick into HMI.

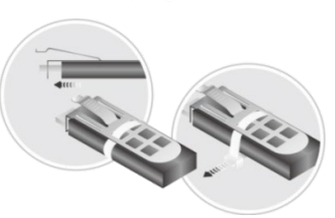

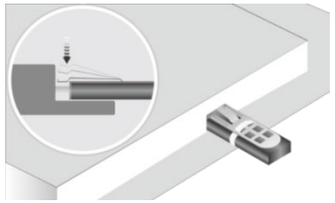

Expansion Module and Magnetic Mount Antenna
1. Connect the expansion module by inserting it into the given slot in HMI's rear cover.
2. Tighten the module to HMI's rear cover using two M3*8L screws.
3. Lock the antenna's SMA connector to the module's connector.
Please reserve space for installing the antenna with minimum bend radius taken into consideration, in order to prevent physical damage to the antenna or impairment of the antenna's performance.

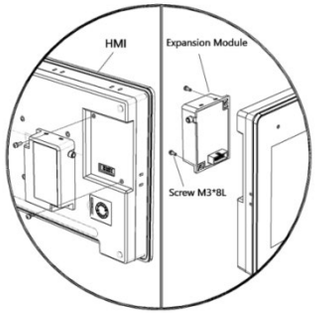

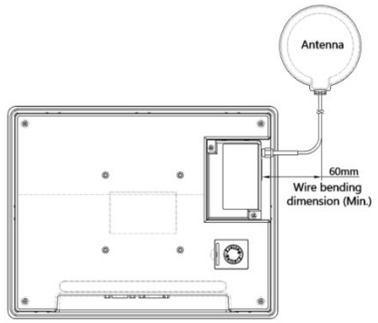

4 Power Connections

⚠
Power Connector Specifications:
Wire AWG: 24~12
Wiring Conductor Minimum Temperature: 75°C
Screw Torque: 4.5 lbf-in (max.)
Copper conduct only.

Spécifications du connecteur d'alimentation:
AWG de fil: 24 ~ 12
Température minimale du conducteur de câblage: 75°C
Couple de vis: 4.5 lbf-in (max.)
Conducteur en cuivre seulement

NOTE: Connect positive DC line to the '+' terminal and the DC ground to the '-' terminal.

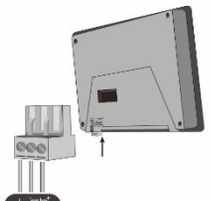

5 System Settings

To enhance system security, a mandatory password change is required upon the first login to the System Settings page. When the HMI powers on and the startup screen appears, tap the round Start button in the upper-left corner. The "Set Your Password" window will appear automatically. Enter the current system password (default: 111111), then set and confirm a new password with at least 8 characters, including both letters and numbers. After selecting "Save", the System Settings page opens. The new password is applied simultaneously to the following accounts—Admin, Update Project, History, User, and Webview—and is known only to the user. This password will be used to authenticate all future logins to system settings and related functions.

6 EasyBuilder Pro Software Settings

Launch EasyBuilder Pro software, select your project file, press F7 shortcut key to open the download dialog box: Select Ethernet > IP tab > Enter your HMI IP > Click Download to download this project file to HMI.
To extend LCD life, powering off the unit for at least 8 hours daily is recommended. For continuous use, enable backlight saver or animated screen saver to reduce image retention and maintain quality.
Flash memory has a limited write lifespan, and frequent data writing (e.g., Event Log, Data Sampling) can accelerate degradation. Consider write frequency and lifespan management in system design to prevent data loss. Refer to "3.2.1. Prolong the Lifespan of Flash Memory" in the Product Security User Manual for guidance. (Please refer to EasyBuilder Pro User Manual for software operation details.)

7 Communication Connections

NOTE:
1. **Only Tx & Rx (no RTS/CTS) may be used for COM1 RS-232 when COM3 RS-232 is also used.**
2. **COM2 and COM3 RS-485 2W support MPI 187.5K, please use one at a time.**
3. **Use #4-40 UNC screws for the D-SUB connector installation.**



Con.B

COM1/COM3 [RS232] 9 Pin, Male, D-sub

PIN#	COM1 [RS232] 4W	COM3 [RS232] 2W
1		
2	RxD	
3	TxD	
4		
5	GND	
6		
7	RTS	TxD
8	CTS	RxD
9	GND	



Con.A

COM2/COM3 [RS485] 9 Pin, Female, D-sub

PIN#	COM2 [RS485]2W	COM2 [RS485]4W	COM3 [RS485]2W
1	Data-	Rx-	
2	Data+	Rx+	
3		Tx-	
4		Tx+	
5	GND		
6			Data-
7			
8			
9			Data+

8 Touchscreen Calibration & Restore Factory Default

Touchscreen Calibration: Press and hold anywhere on the screen during HMI startup.
Restore Factory Default: Follow section 5 instructions of this manual to open the Setting page, and then select "System Properties", press "Reset HMI to Default", enter the Admin password or "default111111", and press "Reset". Please note that all stored project files and data will be erased.

9 Battery Replacement

Battery Specification: Type CR2032, Rated 3V
Battery replacement shall be performed by qualified personnel (engineer) only and care must be taken when handling lithium batteries. For more information on battery replacement and disposal considerations, please refer to the following link: https://dl.weintek.com/Resource/Installation/WK_Battery_en.pdf

CAUTION

NOTE: Make sure that all local and national electrical standards are met when installing the unit. Contact your local authorities to determine which codes apply.

Power	Use power output that meets SELV (Safety Extra-Low Voltage) requirements. The unit can be powered by DC power only, voltage range: 24±20%, compatible with most controller DC systems. The power conditioning circuitry inside the unit is accomplished by a switching power supply. The peak starting current can be as high as 2A.
Fusing Requirements	If the display does not come on within 5 seconds of power up, remove power. A resettable fuse will protect against overcurrent faults in DC circuit and the resetting will take place after a period of time. Check wiring for proper connections and try to power up again.
High Voltage	A resettable fuse will prevent damage for overcurrent condition however it isn't guaranteed. DC voltage sources should provide proper isolation from main AC power and similar hazards.
Emergency Stop	A Hard-wired EMERGENCY STOP should be fitted in any system using an HMI to comply with ICS Safety Recommendations.
Supply Voltage Condition	Do not power the unit and inductive DC loads, or input circuitry to the controller, with the same power supply. Note: The 24 VDC output from some controllers may not have enough current to power the unit.
Wire Routing	a. Power wire length should be minimized (Max: 500m shielded, 300m unshielded). b. Please use twisted pair cables for power wire and signal wire and conform to the impedance matching. c. If wiring is to be exposed to lightning or surges, use appropriate surge suppression devices. d. Keep AC, high energy, and rapidly switching DC power wiring separated from signal wires. e. Add a resistor and capacitor in the parallel connection between the ungrounded DC power supply and the frame ground. This provides a path for static and high frequency dissipation. Typical values to use are 1M Ohm and 4700pF.

DANGER

Hardware Considerations	The system designer should be aware that devices in Controller systems could fail and thereby create an unsafe condition. Furthermore, electrical interference in an operator interface can lead to equipment start-up, which could result in property damage and/or physical injury to the operator. If you use any programmable control systems that require an operator, be aware that this potential safety hazard exists and take appropriate precautions. Although the specific design steps depend on your particular application, the following precautions generally apply to installation of solid-state programmable control devices, and conform to the guidelines for installation of Controllers recommended in NEMA ICS 3-304 Control Standards.
Programming Considerations	To conform to ICS Safety Recommendations, checks should be placed in the controller to ensure that all writable registers that control critical parts of plant or machinery have limit checks built into the program, with an out-of-limit safe shut down procedure to ensure safety of personnel.

GMEC2A8X1_cMT2108X2_Installation_20260114

Limited Warranty

This product is limited warranted against defects in design and manufacture.
The proven defective product will either be repaired or replaced, at Weintek's discretion.
This warranty shall not cover any product which is
(a) Out of warranty period which is 12 months from the manufacturing month of the HMI products.
(b) Damage caused by Force Majeure, accident, negligence, improper installation or misuse.
(c) Product has been repaired or taken apart by unauthorized technicians.
(d) Products whose identification markings have been removed or damaged.